INDOOR / PROYECTORES A CARRIL / CARRIL MAGNÉTICO / CARRIL 3 INSTALACIÓN EMPOTRADA TRIMLESS **Código artículo 86.TL01.3100.02**

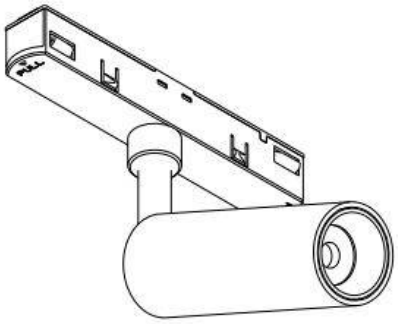

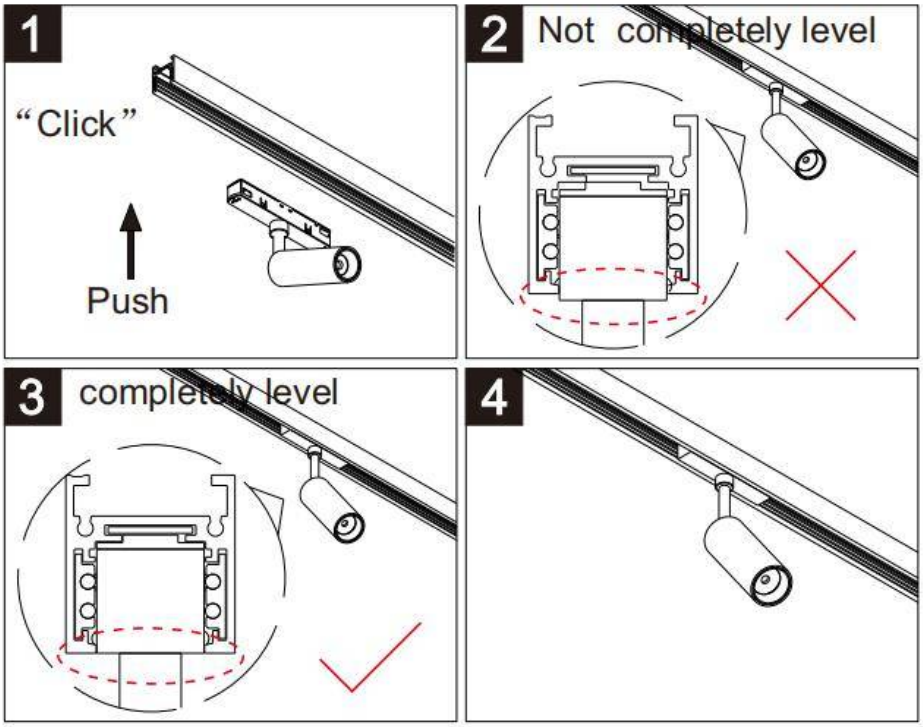

Note: The positive and negative (+, -) signal terminal of 0-10V dimming luminous must be installed corresponding to the input terminal.
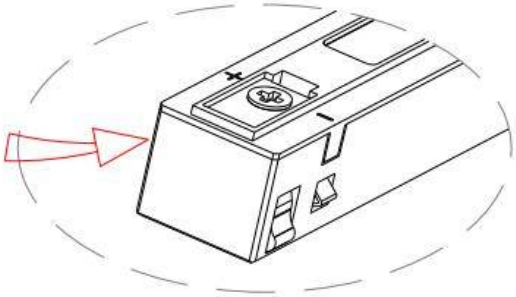
The positive and negative (+, -) signal terminal of DALI dimming luminous, the signal termial does not need to be installed corresponding to the input termial.